PNP Silicon AF and Switching Transistor

- For general AF applications
- High breakdown voltage
- Low collector-emitter saturation voltage
- Complementary type: BCX41 (NPN)

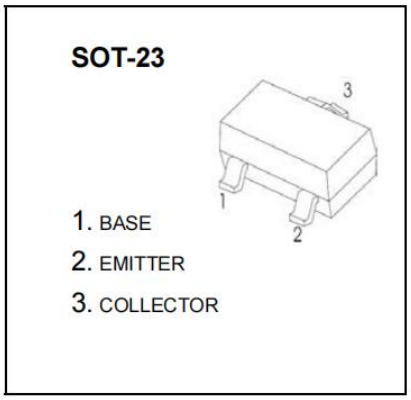

Type	Marking	Pin Configuration			Package
BCX42	DKs	1 = B	2 = E	3 = C	SOT23

Maximum Ratings

Parameter	Symbol	Value	Unit
Collector-emitter voltage	V_{CEO}	125	V
Collector-base voltage	V_{CBO}	125	
Emitter-base voltage	V_{EBO}	5	
Collector current	I_C	800	mA
Peak collector current, $t_p \leq 10$ ms	I_{CM}	1	A
Base current	I_B	100	mA
Peak base current	I_{BM}	200	
Total power dissipation $T_S \leq 79$ °C	P_{tot}	330	mW
Junction temperature	T_j	150	°C
Storage temperature	T_{stg}	-65 ... 150	

Thermal Resistance

Parameter	Symbol	Value	Unit
Junction - soldering point[1)]	R_{thJS}	≤ 215	K/W

[1]For calculation of R_{thJA} please refer to Application Note AN077 (Thermal Resistance Calculation)

Copyright © All right reserved: Heyuan China Base Electronics Technology Co., Ltd.

Electrical Characteristics at T_A = 25°C, unless otherwise specified

Parameter	Symbol	Values			Unit
		min.	typ.	max.	
DC Characteristics					
Collector-emitter breakdown voltage I_C = 10 mA, I_B = 0	$V_{(BR)CEO}$	125	-	-	V
Collector-base breakdown voltage I_C = 100 µA, I_E = 0	$V_{(BR)CBO}$	125	-	-	
Emitter-base breakdown voltage I_E = 10 µA, I_C = 0	$V_{(BR)EBO}$	5	-	-	
Collector-base cutoff current V_{CB} = 100 V, I_E = 0 V_{CB} = 100 V, I_E = 0 , T_A = 150 °C	I_{CBO}	 - -	 - -	 0.1 20	µA
Collector-emitter cutoff current V_{CE} = 100 V, T_A = 85 °C V_{CE} = 100 V, T_A = 125 °C	I_{CEO}	 - -	 - -	 10 75	
Emitter-base cutoff current V_{EB} = 4 V, I_C = 0	I_{EBO}	-	-	100	nA
DC current gain[1)] I_C = 100 µA, V_{CE} = 1 V I_C = 100 mA, V_{CE} = 1 V I_C = 200 mA, V_{CE} = 1 V	h_{FE}	 25 63 40	 - - -	 - - -	-
Collector-emitter saturation voltage[1)] I_C = 300 mA, I_B = 30 mA	V_{CEsat}	-	-	0.9	V
Base emitter saturation voltage[1)] I_C = 300 mA, I_B = 30 mA	V_{BEsat}	-	-	1.4	
AC Characteristics					
Transition frequency I_C = 20 mA, V_{CE} = 5 V, f = 20 MHz	f_T	-	150	-	MHz
Collector-base capacitance V_{CB} = 10 V, f = 1 MHz	C_{cb}	-	12	-	pF

[1]Pulse test: t < 300µs; D < 2%

Copyright © All right reserved: Heyuan China Base Electronics Technology Co., Ltd.

DC current gain $h_{FE} = f(I_C)$

V_{CE} = 1 V

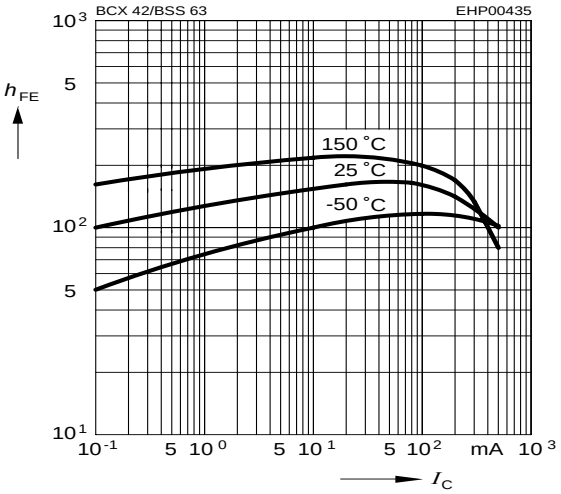

Collector-emitter saturation voltage

$I_C = f(V_{CEsat})$, h_{FE} = 10

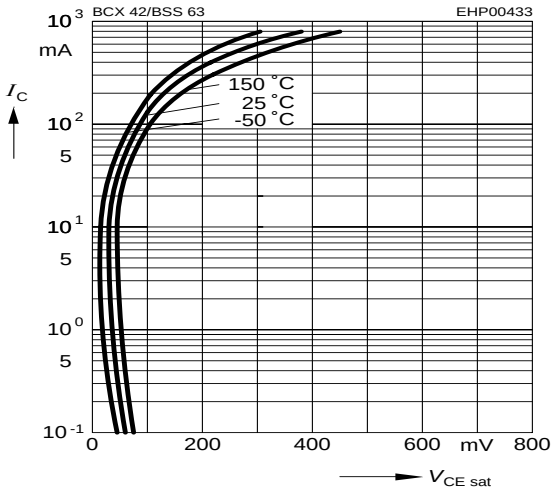

Base-emitter saturation voltage

$I_C = f(V_{BEsat})$, h_{FE} = 10

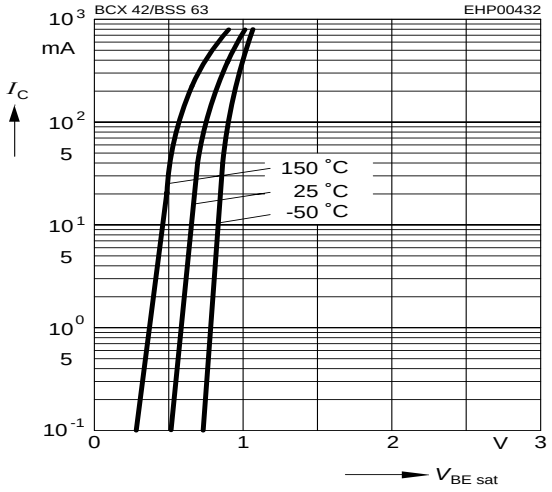

Collector current $I_C = f(V_{BE})$

V_{CE} = 1V

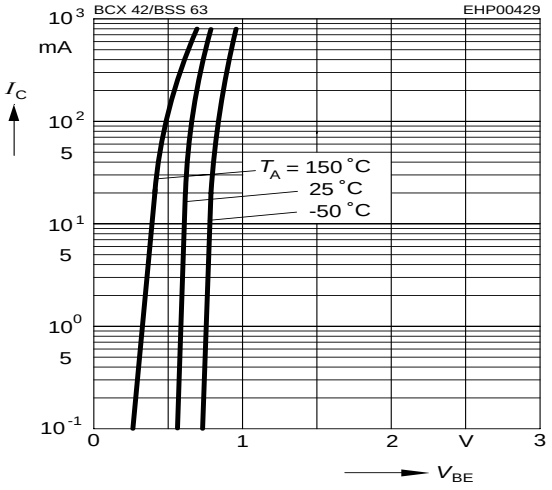

Transition frequency $f_T = f(I_C)$

V_{CE} = parameter in V, f = 2 GHz

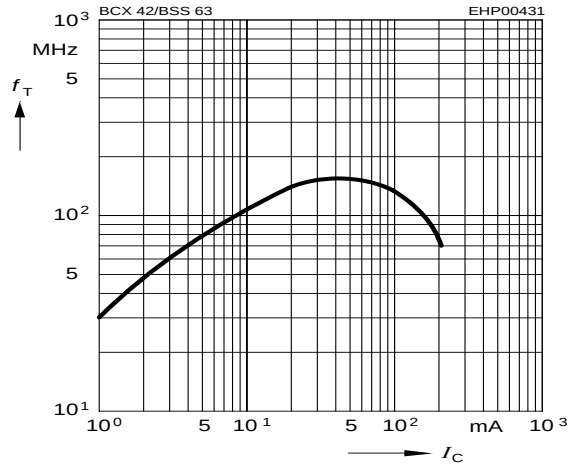

Total power dissipation $P_{tot} = f(T_S)$

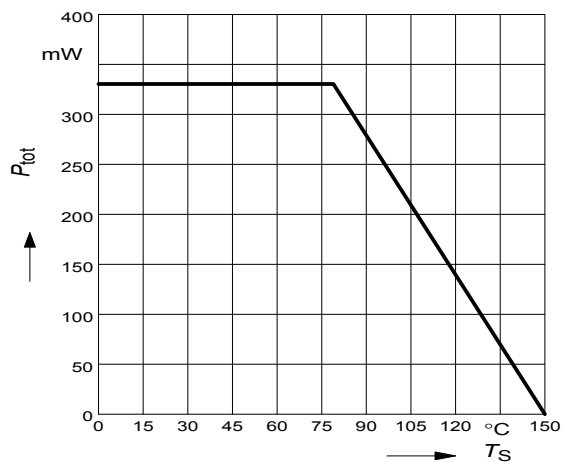

Copyright © All right reserved： Heyuan China Base Electronics Technology Co., Ltd.

PACKAGE OUTLINE

Plastic surface mounted package; 3 leads **SOT-23**

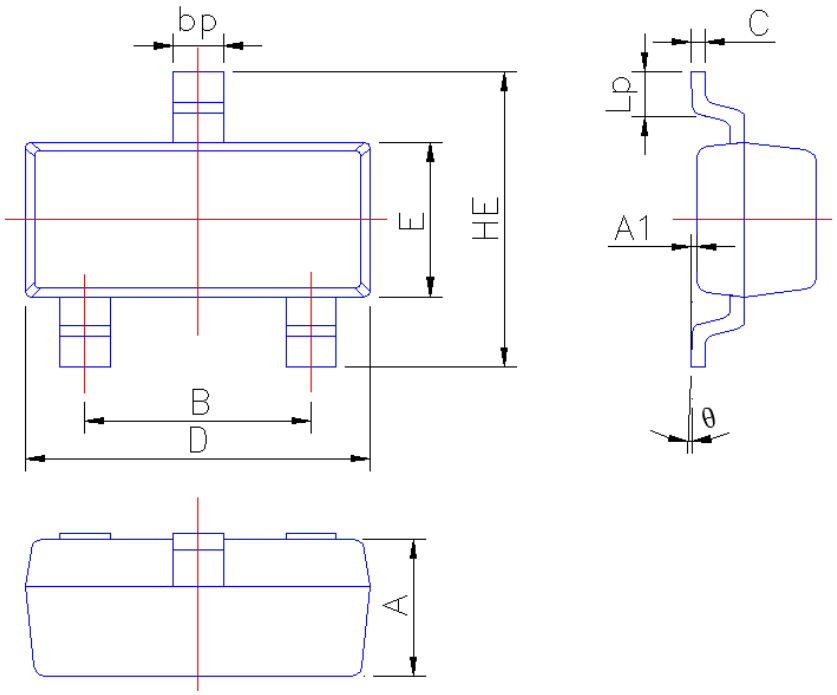

Symbol	Dimension in Millimeters	
	Min	Max
A	0.90	1.10
A1	0.013	0.100
B	1.80	2.00
bp	0.35	0.50
C	0.09	0.150
D	2.80	3.00
E	1.20	1.40
HE	2.20	2.80
Lp	0.20	0.50
θ	0°	5°

Copyright © All right reserved： Heyuan China Base Electronics Technology Co., Ltd.